| Section | T13 | T12 | T11 | T10 | T9 | T8 | T7 | T6 | T5 | T4 | T3 | T2 | T1 | L7 | L6 | L5 | L4 | L3 | L2 | L1 |
|---|---|---|---|---|---|---|---|---|---|---|---|---|---|---|---|---|---|---|---|---|
| Legs | SR 9 1/8 | | SR 8 1/2 | | SR 8 | | SR 7 1/2 | | SR 5 3/4 | | SR 5 1/4 | | SR 5 | SR 4 3/4 | | SR 4 1/4 | | | | |
| Leg Grade | MT2W65-58 | | | | | | | | | | | | | | | | | | | |
| Diagonals | 2L5x5x3/8x3/4 | | | | | | | 2MC10x22x0.75 | 2L3 1/2x3 1/2x1/4x3/4 | | | 2L3x3x1/4x3/4 | | L3x3x1/4 | | L2 1/2x2 1/2x3/16 | | | | |
| Diagonal Grade | A36 | | | | | | | | | | | | | | | | | | | |
| Top Girts | N.A. | | | | | | | | | | | | | | | | | | | A |
| Mid Girts | | | | | | | | N.A. | | | | | | | | N.A. | | | | |
| Horizontals | 2L4x4x1/4x3/4 | | | | | | 2L3 1/2x3 1/2x1/4x3/4 | | | | | | N.A. | | | | | | | |
| Sec. Horizontals | | | | | | | | | | 2L2 1/2x2 1/2x1/4x3/4 | | | | | | N.A. | | | | |
| Inner Bracing | 2L3-1/2x3-1/2x1/4x1/2 | | | | | | 2L3x3x1/4x1/2 | | | | | | | | | | | | | |
| Face Width (ft) | 40 | 37.3846 | 34.7692 | 32.1538 | 29.5385 | 26.9231 | 24.3077 | 21.6923 | 19.0769 | 16.4615 | 13.8462 | 11.2308 | 8.61538 | 6 | | 6 | | | | |
| # Panels @ (ft) | | | | | | | 24 @ 15 | | | | | | 4 @ 7.5 | | 12 @ 7.5 | | | 2 @ 7.375 | | B |
| Weight (K) | 279.9 | 30.4 | 29.9 | 26.8 | 26.4 | 23.7 | 23.3 | 21.0 | 23.2 | 12.6 | 12.1 | 10.0 | 7.8 | 6.8 | 5.7 | 5.3 | 1.3 | 1.3 | 1.3 | 1.3 |

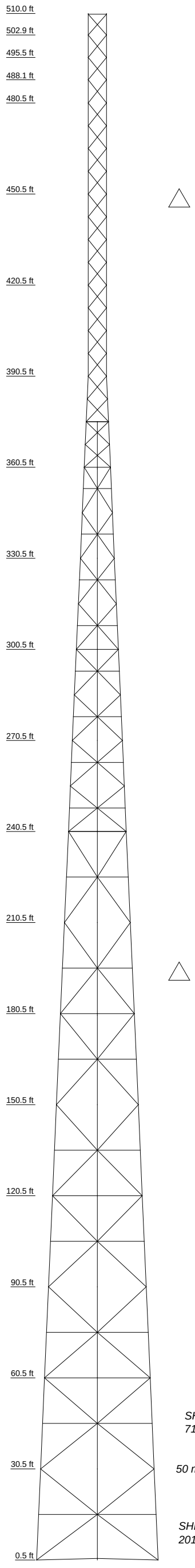


## DESIGNED APPURTENANCE LOADING

| TYPE | ELEVATION | TYPE | ELEVATION |
|---|---|---|---|
| lightning rod (optional) | 512 | (1/4) ERI AL8N-44-PL | 171 |
| Beacon Lighting | 510 | (1/2) ERI AL8N-44-PL | 164 |
| Antenna Mounts For : Ch. 44 - 40Bay RF Tech ant. :( CaAa = 79.5 F. : 45.1 S. sq. ft. ; Weight = 1.920 Kips ) | 508 - 429.104 | (1/4) ERI AL8N-44-PL | 157 |
| | | Obstruction Lights | 127.875 |
| Ch. 44 - 40Bay RF Tech ant. :( CaAa = 81.0 sq. ft. ; Weight = .780 Kips ) (6 1/8") | 505 - 432.104 | Obstruction Lights | 127.875 |
| | | Obstruction Lights | 127.875 |
| Obstruction Lights | 382.625 | Lightning Dissipater | 92 |
| Obstruction Lights | 382.625 | 1" x 10' Omni w/ Mount | 62 |
| Obstruction Lights | 382.625 | 2'x3' Paraflector w/ Mount | 55 |
| Beacon Lighting | 255.25 | Maxrad Panel Antenna w/ Mount | 51 |
| Beacon Lighting | 255.25 | Sinclair SRL360 w/ Mount | 41 |
| Beacon Lighting | 255.25 | 2' MW RAD | 36 |
| Internal Platform | 240 | 3'x2' Paraflector w/ Mount | 30 |
| TFU-36J DAS : ( CaAa = 70.00 sq. ft. ; Weight = 5.0 Kips ) (6 1/8") | 225.3 - 180 | 4'x2' Paraflector w/ Mount | 27 |
| | | 2'x3' Paraflector w/ Mount | 25 |
| | | 1" x 10' Omni w/ Mount | 22 |

## SYMBOL LIST

| MARK | SIZE | MARK | SIZE |
|---|---|---|---|
| A | L2 1/2x2 1/2x3/16 | C | 1 @ 7.625 |
| B | 1 @ 6.875 | | |

## MATERIAL STRENGTH

| GRADE | Fy | Fu | GRADE | Fy | Fu |
|---|---|---|---|---|---|
| MT2W65-58 | 58 ksi | 65 ksi | A36 | 36 ksi | 58 ksi |

## TOWER DESIGN NOTES

1. Tower is located in San Bernardino County, California.
2. Tower designed for Exposure C to the TIA-222-G Standard.
3. Tower designed for a 85 mph basic wind in accordance with the TIA-222-G Standard.
4. Tower is also designed for a 50 mph basic wind with 0.50 in ice. Ice is considered to increase in thickness with height.
5. Deflections are based upon a 60 mph wind.
6. V3s=85mph-0" ice, V3s=50mph-1/2" ice, Structure Class II, Topographic Category III, and a Crest Height=1255' per TIA/EIA-222-G Standard.
7. Tower designed for step bolts up three legs and integral climbing ladder up the internal feed tower to 375'.
8. Tower designed using V-mount for flex line runs.
9. Leg "A" Orientated in Easterly Direction.

*MAX. CORNER REACTIONS AT BASE:*
*DOWN: 1389 K*
*UPLIFT: -1028 K*
*SHEAR: 285 K*

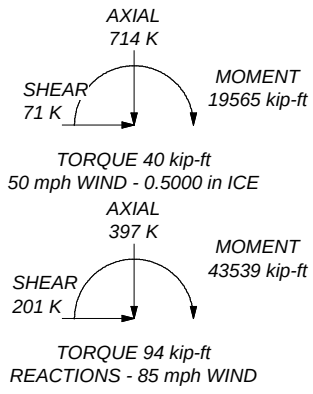



Tower Innovations
2855 Hwy. 261
Newburgh, IN. 47630
Phone: (812) 853-0595
FAX: (812) 853-6652


| | | | |
|---|---|---|---|
| Job: S2954 - 18949r1 | | | |
| Project: Victorville, CA. | | | |
| Client: | Drawn by: T.I. Engineering Dept. | App'd: | |
| Code: TIA-222-G | Date: 12/19/06 | Scale: NTS | |
| Path: C:\0 - Current Design Runs\PDF\15 - Bolted SS Tower - Side Mounted TV With Centerfeed Tower - - S2954 - 18949r1.en | | Dwg No: E-1 | |